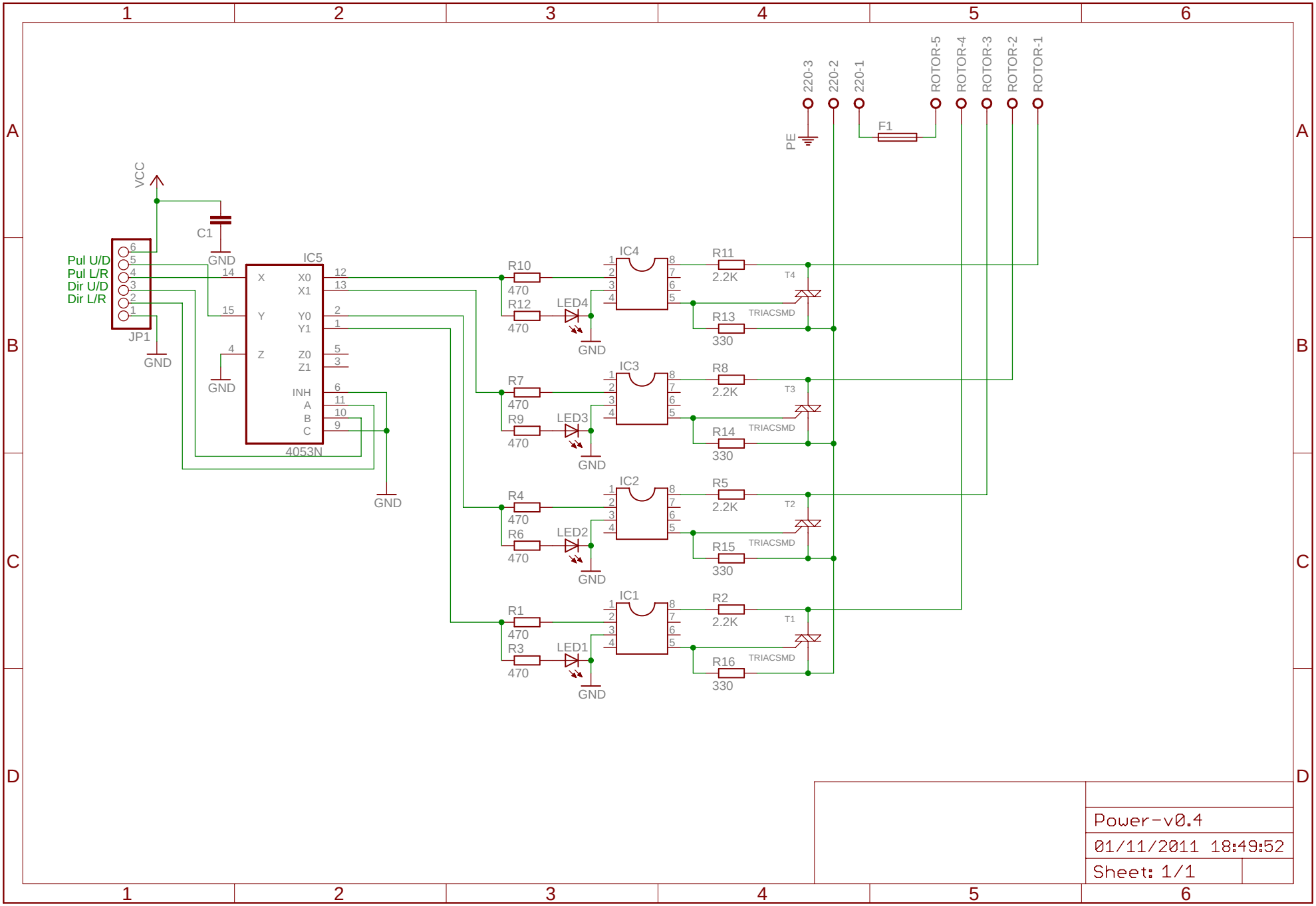
VCC
C1
GND
Pul U/D
Pul L/R
Dir U/D
Dir L/R
JP1
IC5
4053N
X
X0
X1
Y
Y0
Y1
Z
Z0
Z1
INH
A
B
C
R10
R12
R7
R9
R4
R6
R1
R3
470
LED4
LED3
LED2
LED1
IC4
IC3
IC2
IC1
R11
R13
R8
R14
R5
R15
R2
R16
2.2K
330
T4
T3
T2
T1
TRIACSMD
220-3
220-2
220-1
PE
F1
ROTOR-5
ROTOR-4
ROTOR-3
ROTOR-2
ROTOR-1
Power-v0.4
01/11/2011 18:49:52
Sheet: 1/1