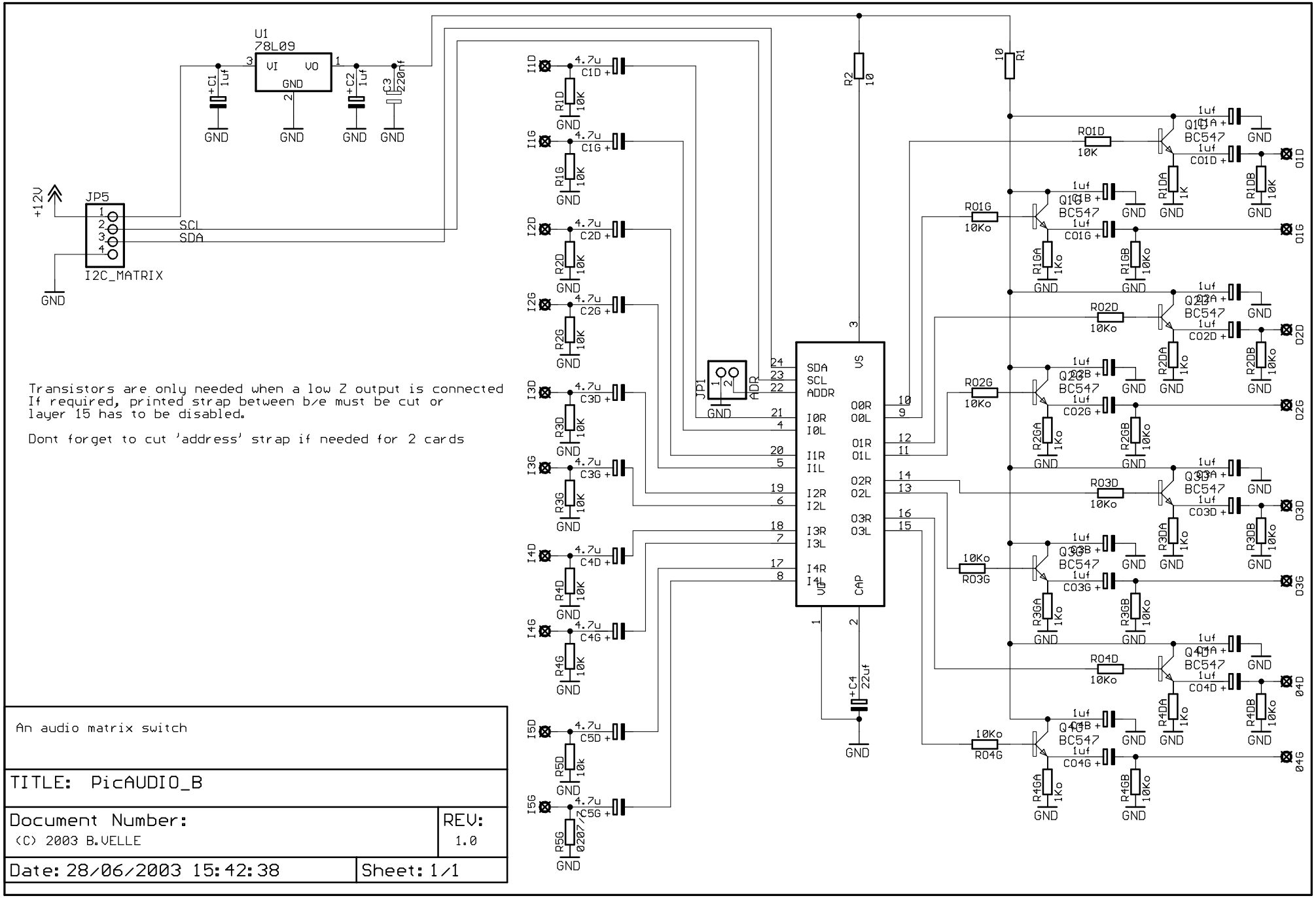
U1
78L09
VI
VO
GND
C1 1uf
C2 1uf
C3 220nf
+12V
JP5
SCL
SDA
I2C_MATRIX
GND
Transistors are only needed when a low Z output is connected
If required, printed strap between b/e must be cut or
layer 15 has to be disabled.
Dont forget to cut 'address' strap if needed for 2 cards
SDA
SCL
ADDR
VS
CAP
VD
JP1
ADR
R2 10
R1 10
C4 22uf
BC547
An audio matrix switch
TITLE: PicAUDIO_B
Document Number:
(C) 2003 B.VELLE
REV:
1.0
Date: 28/06/2003 15:42:38
Sheet: 1/1